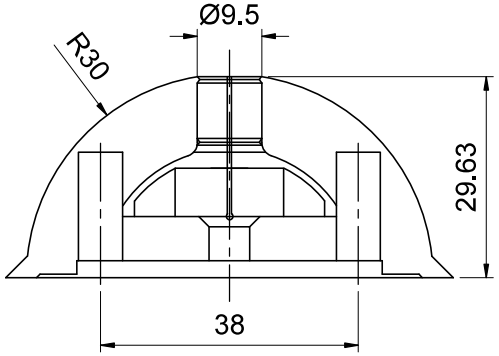

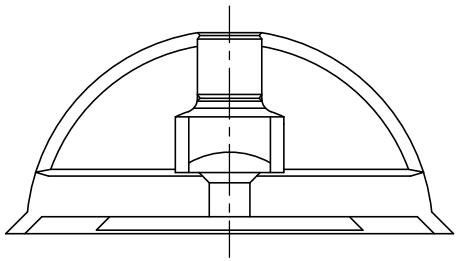

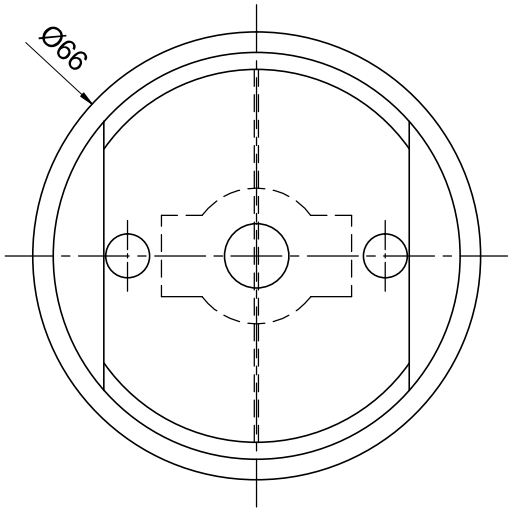

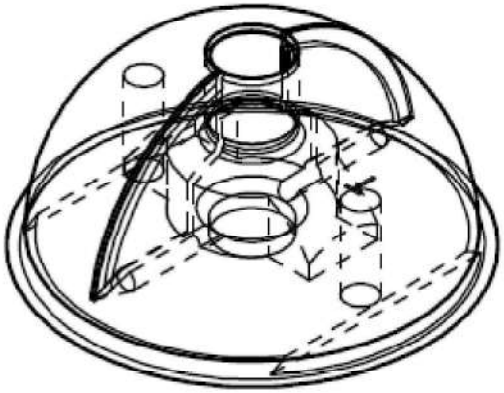

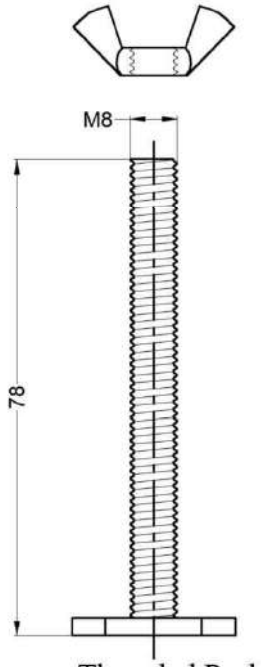

Threaded Rod
with
Wing Nut

- The information contained in the above drawings are :
a) The property of Halfen Moment S/B,
b) Confidential
c) May also be legally privileged.
They are intended for the person attention to. Any person other the attention shall not disclose, copy or distribute in reliance on them.
- Any technical advice/support or drawings provided by us in whatever form is given to the best of our knowledge and for general use only and shall be considered non-binding information.

MOMENT	Material							Article Name
	Alternate Material							MOMENT Recess Former - 1MRF 1.3T (Customer Copy)
	Finish							
	Tolerance		Rev No	Date	Description	Drawn by	Approved by	Article Number
	Unless Otherwise Specified - All Dimensions in millimeter							104-02MM-PX0001

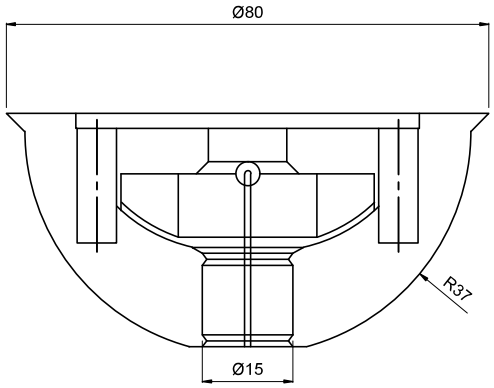

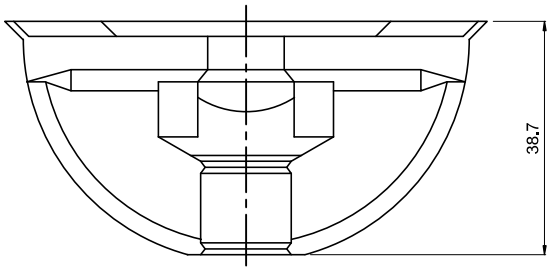

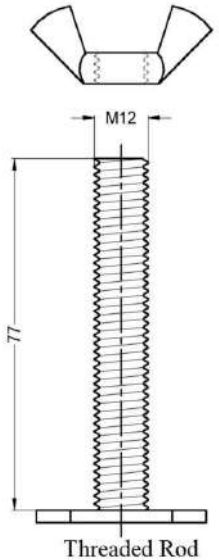

Threaded Rod
with
Wing Nut

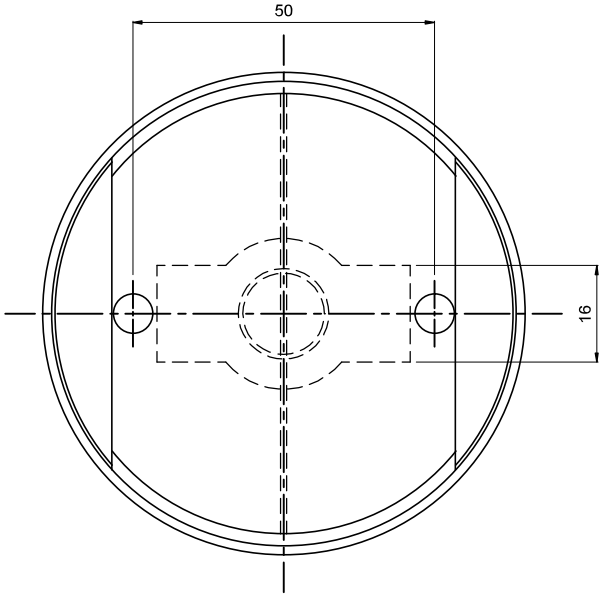

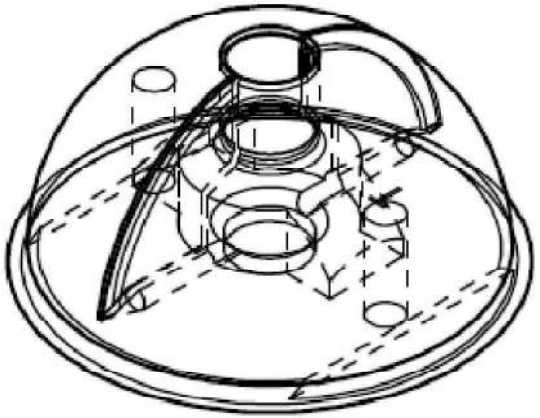

- The information contained in the above drawings are :
a) The property of Halfen Moment S/B,
b) Confidential
c) May also be legally privileged.
They are intended for the person attention to. Any person other the attention shall not disclose, copy or distribute in reliance on them.
- Any technical advice/support or drawings provided by us in whatever form is given to the best of our knowledge and for general use only and shall be considered non-binding information.

MOMENT	Material							Article Name
	Alternate Material							MOMENT Recess Former - 2MRF 2.5T (Customer Copy)
	Finish							
	Tolerance		Rev No	Date	Description	Drawn by	Approved by	Article Number
	Unless Otherwise Specified - All Dimensions in millimeter							104-02MM-PX0002

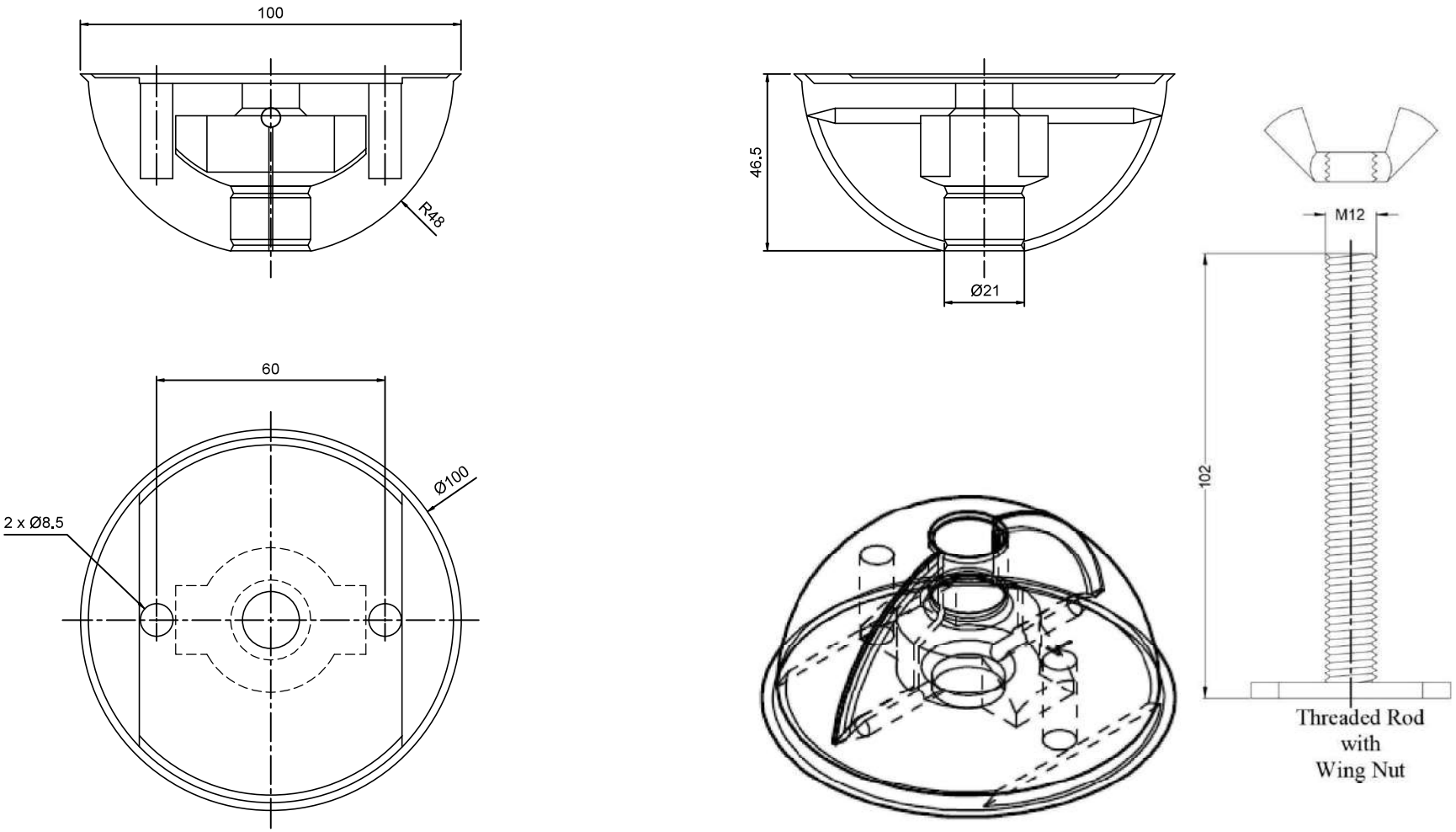

- The information contained in the above drawings are :
a) The property of Halfen Moment S/B,
b) Confidential
c) May also be legally privileged.
They are intended for the person attention to. Any person other the attention shall not disclose, copy or distribute in reliance on them.
- Any technical advice/support or drawings provided by us in whatever form is given to the best of our knowledge and for general use only and shall be considered non-binding information.

MOMENT	Material							Article Name
	Alternate Material							MOMENT Recess Former - 5MRF 5.0T (Customer Copy)
	Finish							
	Tolerance		Rev No	Date	Description	Drawn by	Approved by	Article Number 104-02MM-PX0003
	Unless Otherwise Specified - All Dimensions in millimeter							

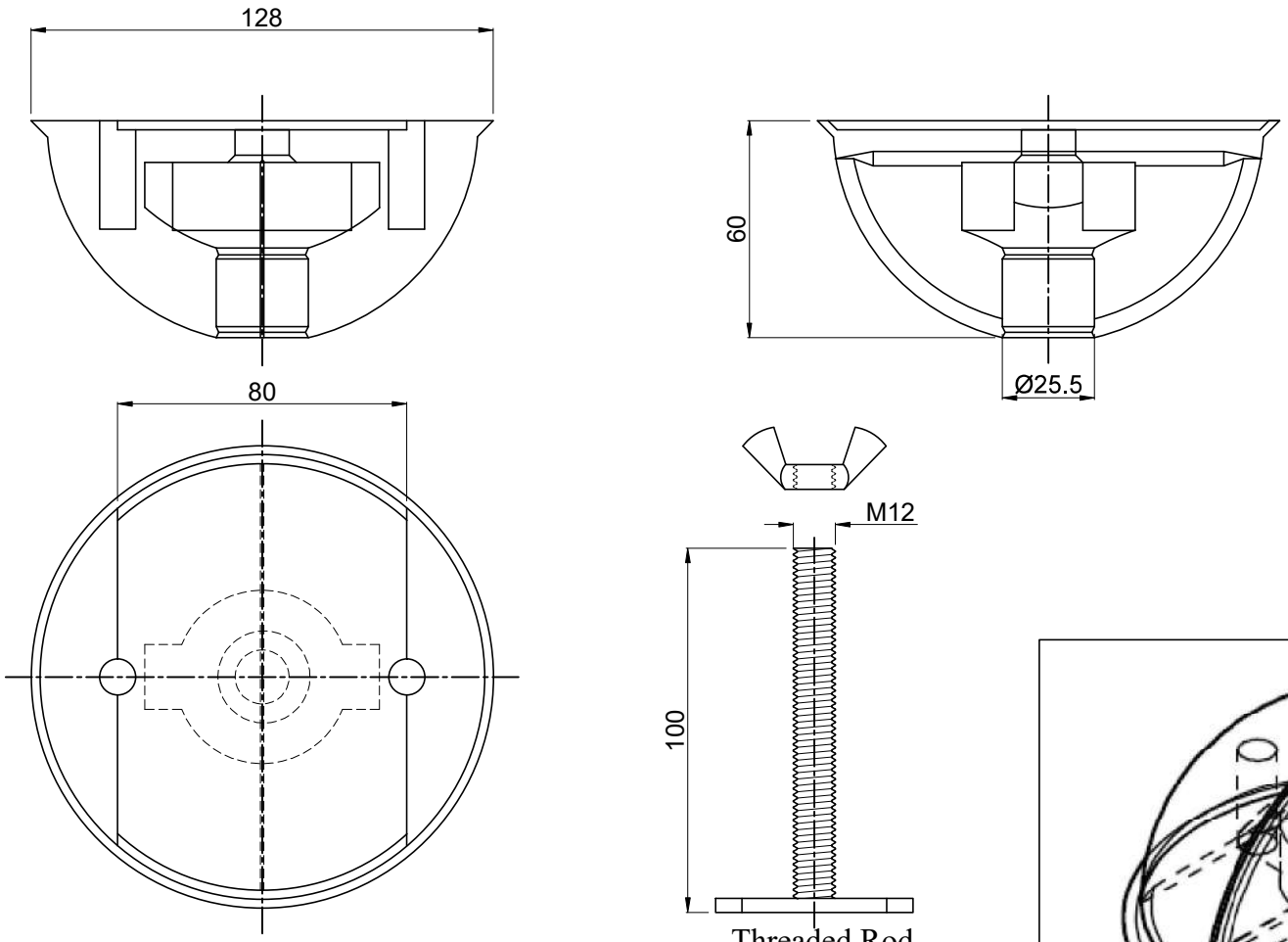

Threaded Rod
with
Wing Nut

SCALE 1 : 2

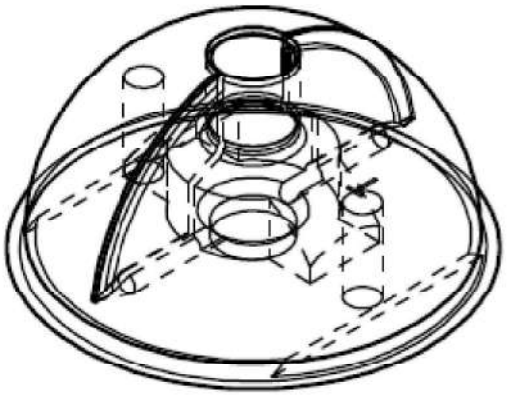

- The information contained in the above drawings are :
a) The property of Halfen Moment S/B,
b) Confidential
c) May also be legally privileged.
They are intended for the person attention to. Any person other the attention shall not disclose, copy or distribute in reliance on them.
- Any technical advice/support or drawings provided by us in whatever form is given to the best of our knowledge and for general use only and shall be considered non-binding information.

MOMENT

Material							Article Name
Alternate Material							MOMENT Recess Former - 7MRF 7.5T (Customer Drawing)
Finish							
Tolerance		Rev No	Date	Description	Drawn by	Approved by	Article Number
Unless Otherwise Specified - All Dimensions in millimeter							104-02MM-PX0012

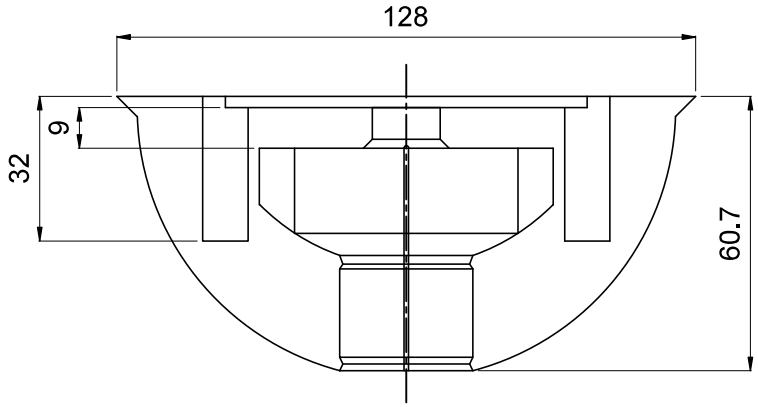

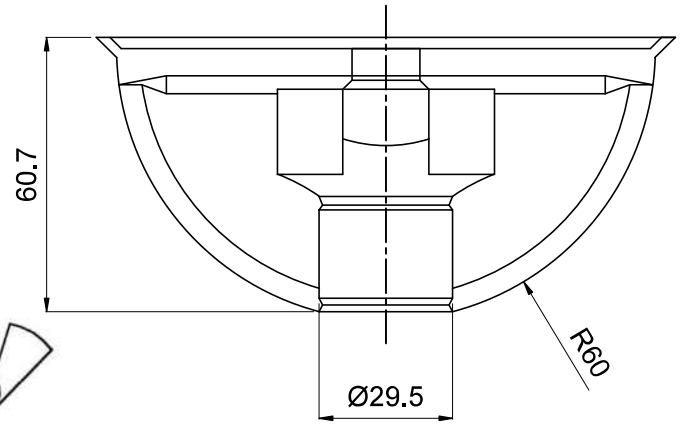

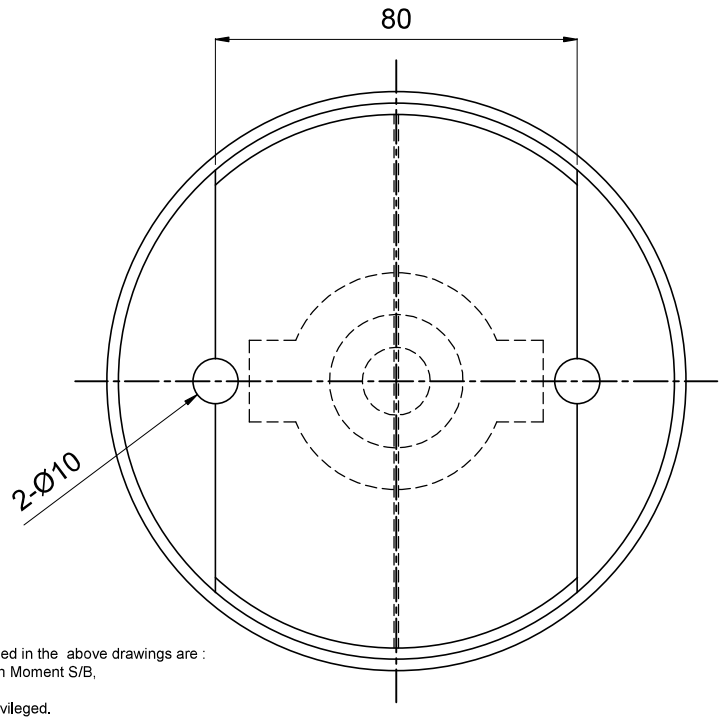

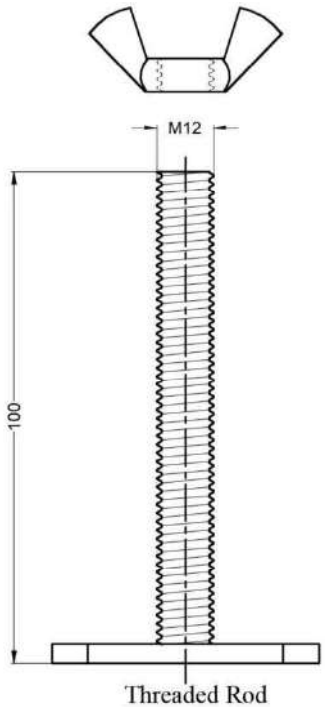

Threaded Rod
with
Wing Nut

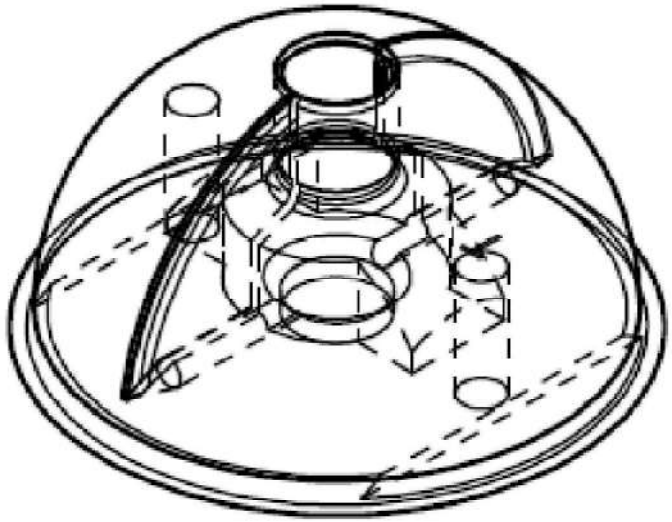

- The information contained in the above drawings are :
a) The property of Halfen Moment S/B,
b) Confidential
c) May also be legally privileged.
They are intended for the person attention to. Any person other the attention shall not disclose, copy or distribute in reliance on them.
- Any technical advice/support or drawings provided by us in whatever form is given to the best of our knowledge and for general use only and shall be considered non-binding information.

MOMENT	Material						Article Name MOMENT Recess Former - 10MRF 10.0T (Customer Copy)
	Alternate Material						
	Finish						
	Tolerance		Rev No	Date	Description	Drawn by	Approved by	Article Number 104-02MM-PX0004
	Unless Otherwise Specified - All Dimensions in millimeter						

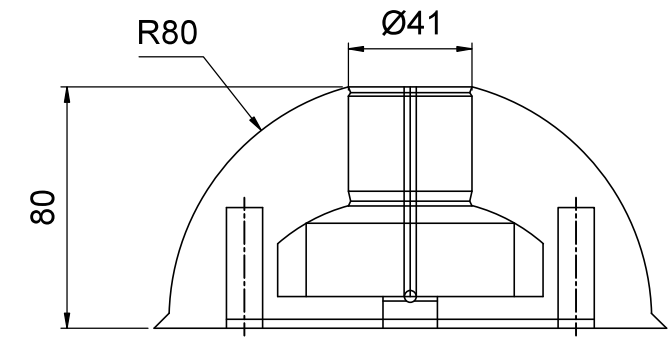

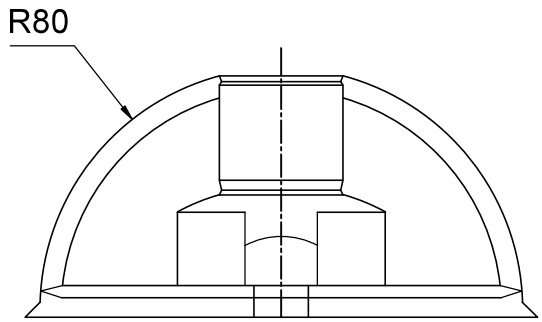

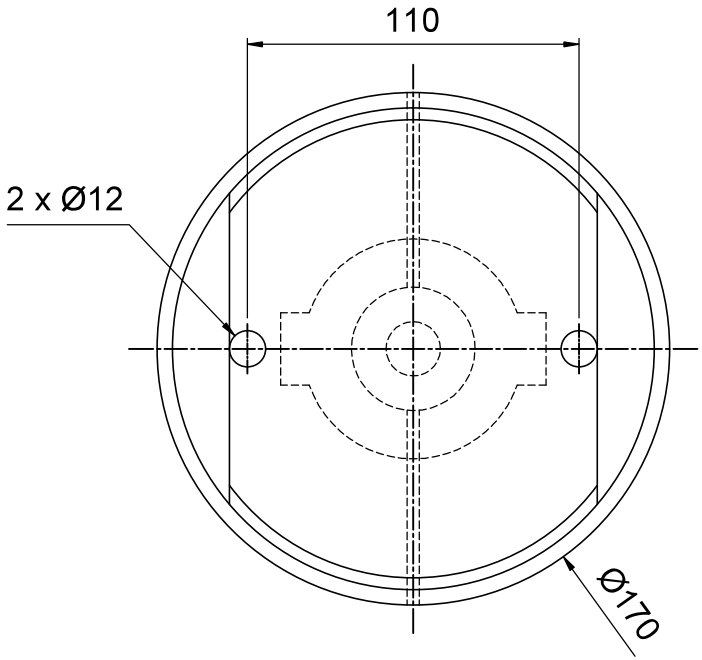

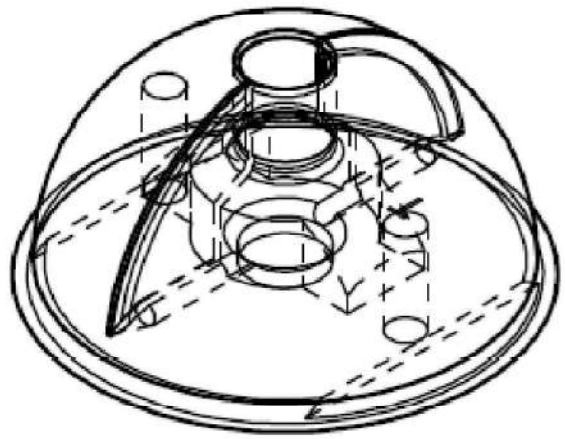

- The information contained in the above drawings are :
a) The property of Halfen Moment S/B,
b) Confidential
c) May also be legally privileged.
They are intended for the person attention to. Any person other the attention shall not disclose, copy or distribute in reliance on them.
- Any technical advice/support or drawings provided by us in whatever form is given to the best of our knowledge and for general use only and shall be considered non-binding information.

MOMENT	Material							Article Name
	Alternate Material							MOMENT Recess Former - 20MRF 20.0T (Customer Copy)
	Finish							
	Tolerance		Rev No	Date	Description	Drawn by	Approved by	Article Number
	Unless Otherwise Specified - All Dimensions in millimeter							104-02MM-PX0007

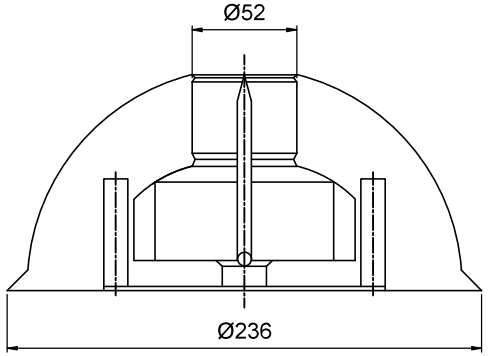

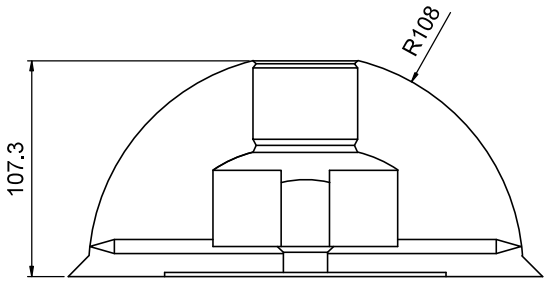

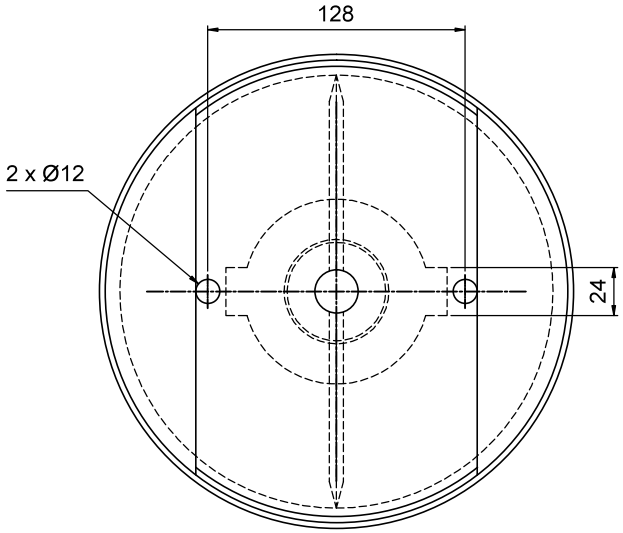

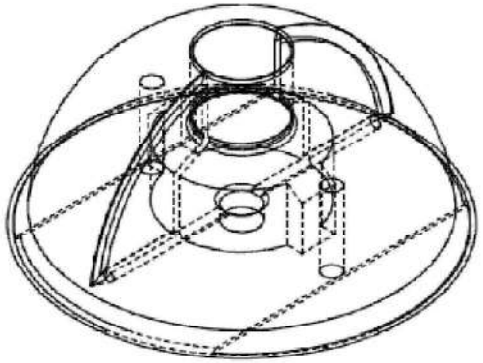

- The information contained in the above drawings are :
a) The property of Halfen Moment S/B,
b) Confidential
c) May also be legally privileged.
They are intended for the person attention to. Any person other the attention shall not disclose, copy or distribute in reliance on them.
- Any technical advice/support or drawings provided by us in whatever form is given to the best of our knowledge and for general use only and shall be considered non-binding information.

MOMENT

Material							Article Name
Alternate Material							MOMENT Recess Former - 32MRF 32.0T
Finish							
Tolerance		Rev No	Date	Description	Drawn by	Approved by	Article Number
Unless Otherwise Specified - All Dimensions in millimeter							104-02MM-PX0016